Journal of Experimental Botany, Vol. 65, No. 10, pp. 2667–2676, 2014
doi:10.1093/jxb/eru069 Advance Access publication 17 March, 2014

Journal of Experimental Botany
www.jxb.oxfordjournals.org

REVIEW PAPER

Arabidopsis Retinoblastoma-related and Polycomb group proteins: cooperation during plant cell differentiation and development

Asuka Kuwabara* and Wilhelm Gruissem*

Department of Biology, ETH Zurich, Universitaetstrasse 2, 8092 Zurich, Switzerland

* To whom correspondence should be addressed. E-mail: kasuka@ethz.ch or wgruisse@ethz.ch

Received 15 November 2013; Revised 20 December 2013; Accepted 29 January 2014

Abstract

***RETINOBLASTOMA* (*RB*) is a tumour suppressor gene originally discovered in patients that develop eye tumours. The pRb protein is now well established as a key cell-cycle regulator which suppresses G1–S transition via interaction with E2F–DP complexes. pRb function is also required for a wide range of biological processes, including the regulation of stem-cell maintenance, cell differentiation, permanent cell-cycle exit, DNA repair, and genome stability. Such multifunctionality of pRb is thought to be facilitated through interactions with various binding partners in a context-dependent manner. Although the molecular network in which RB controls various biological processes is not fully understood, it has been found that pRb interacts with transcription factors and chromatin modifiers to either suppress or promote the expression of key genes during the switch from cell proliferation to differentiation. *RETINOBLASTOMA-RELATED* (*RBR*) is the plant orthologue of *RB* and is also known to negatively control the G1–S transition. Similar to its animal counterpart, plant RBR has various roles throughout plant development; however, much of its molecular functions outside of the G1–S transition are still unknown. One of the better-characterized molecular mechanisms is the cooperation of RBR with the Polycomb repressive complex 2 (PRC2) during plant-specific developmental events. This review summarizes the current understanding of this cooperation and focuses on the processes in *Arabidopsis* in which the RBR–PRC2 cooperation facilitates cell differentiation and developmental transitions.**

Key words: Cell cycle, chromatin modification, gametophyte development, Polycomb group genes, Retinoblastoma-related, seedling establishment.

Introduction

The RETINOBLASTOMA gene (*RB*) is inactivated or mutated in most types of human cancers (Knudsen and Knudsen, 2006). Thus, the molecular mechanism by which *RB* controls the cell cycle has been intensively investigated. It is now widely accepted that the protein encoded by *RB*, pRb, is a key cell-cycle regulator that controls the transcription of numerous genes during the G1–S transition. More recently, increasing evidence also suggests that pRb has regulatory functions during the progression of G2 and the transition to M phase (reviewed in Henley and Dick, 2012). Hyperphosphorylation of pRb by the CYCLIN DEPENDENT KINASE (CDK) complexes releases pRb from E2F–DP transcription factor complexes, resulting in the activation of S-phase genes (reviewed in Weinberg, 1995). Since cell-cycle activity has to be precisely controlled during development or in response to physiological signals, pRb has received much attention as a key switch that could connect developmental or physiological cues to cell-cycle control. The RETINOBLASTOMA-RELATED gene (*RBR*) in plants is the orthologue of the animal *RB* gene, and several of the known functions of the pRb protein are conserved in plants as well (Gutzat *et al.*, 2012). Unlike animals, however, many

© The Author 2014. Published by Oxford University Press on behalf of the Society for Experimental Biology. All rights reserved.
For permissions, please email: journals.permissions@oup.com

of the molecular mechanisms of RBR function and its interactions with other core cell-cycle regulators have not been investigated in detail in plants.

In addition to its canonical role in G1–S transition, a requirement of pRb function has now been reported for a wide range of developmental and physiological processes in animals, such as regulation of stem-cell maintenance, cell differentiation, permanent cell-cycle exit, and genome stability (reviewed in Henley and Dick, 2012). During the transition from cell proliferation to differentiation, pRb often associates with various chromatin-modifying proteins and complexes, such as histone deacetylases (HDACs) or histone methyl transferase (reviewed in Talluri and Dick., 2012), the SWI–SNF complex (Zhang *et al.*, 2000; Flowers *et al.*, 2010), or the Polycomb group (PcG) complex (Dahiya *et al.*, 2001; Bracken *et al.*, 2003; Blais *et al.*, 2007; Kotake *et al.*, 2007). In addition to inhibiting E2F-dependent transcription by repression of the E2F transactivation domain ($E2F^{TD}$), pRb recruits corepressors to the E2F target loci that, in many cases, are chromatin-modifying complexes. Recent studies have revealed that pRb also promotes gene expression through interaction with the SWI–SNF chromatin-remodelling complex (Flowers *et al.*, 2010). However, since chromatin-modifying complexes that interact with pRb do not always contain E2F, it now appears that pRb controls the expression of wide range of E2F-dependent and -independent genes. Although the molecular details of pRb incorporation into chromatin-modifying complexes remain to be elucidated, new insights into the pRb structure and interaction with proteins are now beginning to provide clues about the molecular function of pRb. Many of the pRb-interacting proteins are also conserved in plants (Gutzat *et al.*, 2012). Although the molecular structure of the plant RBR is currently not known, it can be expected that RBR engages in similar functional complexes with these proteins.

Despite a number of chromatin-modifying complexes that have been reported to interact with animal pRb (Talluri and Dick, 2012), it is only the PcG complexes that have been found to interact with plant RBR *in vivo*. Although current knowledge of the molecular functions of plant RBR outside of the G1–S transition is very limited, many more chromatin modifiers will likely be uncovered in the future to interact and cooperate with plant RBR as well. This review focuses on plant Polycomb Recessive Complex 2 (PRC2) to provide conceptual insights into current understanding of interactions between plant RBR and chromatin-modifying complexes.

Retinoblastoma proteins function as protein-docking platforms

In animals, pRb interacts with multiple binding partners in a context-dependent manner, and it is likely that all of pRb is found in complexes; however, the number of different pRb complexes and their coexistence in the cell is largely unknown. Structural analysis of human pRb has reinforced the view that the protein is highly disordered and multiple phosphorylation sites could facilitate structural changes that would enable the formation of multicombinatorial protein–protein binding interfaces in both animal and plant proteins (reviewed in Dick and Rubin, 2013). In general, three domains can be discerned in pRb: the N-terminal domain (RbN), the pocket domain, which comprises RbA and RbB, and the C-terminal domain (RbC) (Fig.1A). While the RbN

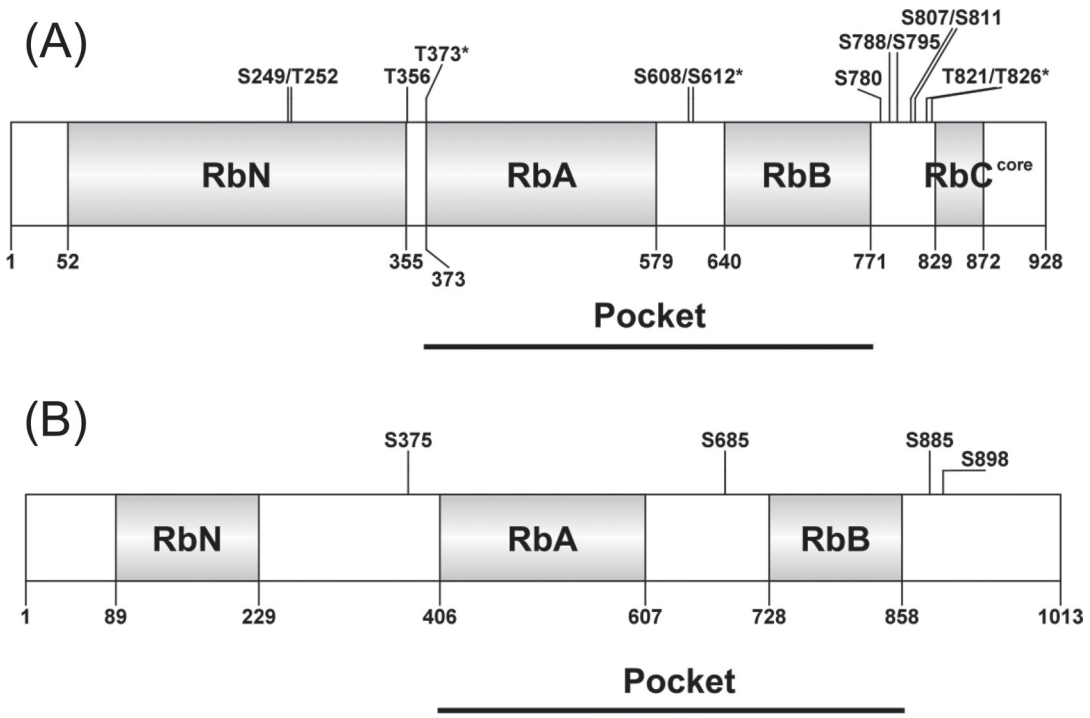

Fig. 1. Comparison of pRb (A) and *Arabidopsis* RBR (B). pRb has 13 experimentally confirmed phosphorylation sites, while only four phosphorylation sites have been experimentally confirmed in *Arabidopsis* RBR. The conformation changes and its biochemical output have been confirmed on five phosphorylation sites, indicated with asterisks.

and the pocket domains comprise several helical structures, RbC appears to be highly disordered (Rubin *et al.*, 2005). The pocket domain is highly conserved in the animal pocket protein family and has two pivotal interfaces for binding other proteins: the $E2F^{TD}$- and the LXCXE-binding clefts (where X represents any amino acids). E2F represents a small family of transcription factors, which, together with the small DP family of transcription factors, form heterodimers (van den Heuvel and Dyson, 2008). When $E2F^{TD}$ is bound to pRb, the E2F–DP complex is unable to activate transcription. Phosphorylation in the pocket domain causes conformational changes that release pRb from binding to $E2F^{TD}$ and allows the E2F–DP complex to activate transcription. Since many genes that encode cell-cycle proteins have E2F-binding sites in their promoters, their expression is primarily regulated by the pRb–E2F pathway. The LXCXE-binding cleft is known to bind various proteins that contain the LXCXE motif, including viral proteins (Lee *et al.*, 1998; Kim *et al.*, 2001), chromatin-remodelling factors, and histone-modifying enzymes (Brehm and Kouzarides, 1999). The RbC interacts with the 'marked box' ($E2F^{MB}$) domain of E2F–DP, which is involved in the regulation of apoptosis (Dick and Dyson, 2003; Julian *et al.*, 2008). These three domains—RbN, the pocket domain, and RbC—are connected by unstructured and flexible regions which contain a number of CDK phosphorylation sites (Fig. 1A). Phosphorylation in those flexible regions causes conformation change of the protein, resulting in the interference of the binding of other proteins to RB (reviewed in Rubin, 2013).

Human pRb has 13 experimentally confirmed phosphorylation sites and the global conformation change upon phosphorylation is site specific (reviewed in Rubin, 2013). In particular, for three sites, conformational changes with defined biochemical output have been experimentally confirmed. T373 phosphorylation located in the N-terminal region of RbA facilitates interaction between RbN and the pocket domain, which masks the $E2F^{TD}$- and LXCXE-binding clefts (Burke *et al.*, 2012). S608/S612 phosphorylation in a loop structure within the pocket domain also masks the $E2F^{TD}$-binding site, which prevents $E2F^{TD}$ binding to pRb (Burke *et al.*, 2012). The T821/T826 phosphorylation sites are closest to the RbC core and their phosphorylation allows RbC to bind the pocket domain, thus blocking RbC-$E2F1^{MB}$–DP interactions and binding via the LXCXE cleft in the pocket domain (Rubin *et al.*, 2005). Although details remain to be worked out, discrete or combinatorial phosphorylation of pRb could regulate interactions with various proteins, highlighting the multifunctional role of pRb as a docking platform.

The crystal structure of plant RBR has not yet been established; however, based on amino acid sequence homology, RbN and the pocket domain, but not RbC, are conserved in RBR (Fig. 1B; Ach *et al.*, 1997; Durfee *et al.*, 2000). In addition, many potential CDK phosphorylation sites are present in RBR as well (Durfee *et al.*, 2000); however, phosphorylation at only four sites has so far been found experimentally in the *Arabidopsis* RBR protein (Reiland *et al.*, 2009). These phosphorylation sites in RBR do not include critical phosphorylation sites in pRb that are most likely conserved in RBR. Interestingly, recent reports suggest that a phospho-specific antibody that is specific to S807/S811 phosphorylation in human pRb also recognizes plant RBR (Abrahám *et al.*, 2011; Magyar *et al.*, 2012), although it remains unknown which phosphorylation site in plant RBR has been detected using the human pRb S807/S811 phospho-specific antibody. Although a phosphorylation site similar to S807/S811 in human pRb might be conserved in alfalfa (*Medicago sativa* spp. *varia*) and *Arabidopsis* RBR, there is currently no information on the relevance of these serine residues in plant RBR. Thus, more work is clearly needed to investigate candidate phosphorylation sites in plant RBR and the functional consequences of their phosphorylation.

Function of RBR during the G1 to S transition

The conservation of structural domains and phosphorylation sites suggests that plant RBR has similar biochemical properties as animal pRb. Indeed, the canonical function of animal pRb as a negative cell-cycle regulator at the G1–S transition checkpoint appears to be conserved in plant RBR as well (reviewed in Gruissem, 2007). In animals, binding between D-type cyclins and pRb via the LXCXE motif is essential for the phosphorylation of the protein by CYCLIN D (CycD)–CDK complexes (Dowdy *et al.*, 1993; Kato *et al.*, 1993). Tobacco RBR (NtRBR) can be phosphorylated by a tobacco CycD3–CDKA complex *in vitro* (Nakagami *et al.*,1999) and NtRBR phosphorylation is found only between mid-G1 to early S phase in tobacco BY-2 cells (Nakagami *et al.*, 2002). Binding of *Arabidopsis* D-type cyclins to maize RBR requires the LXCXE motif (Huntley *et al.*, 1998), similar to CycD interaction with pRb in animals. In *Arabidopsis*, 12 CDKs (CDKA and CDKB) are implicated in core cell-cycle regulation (Gutierrez, 2009); however, results from a *cdka* null mutant suggest that RBR is primarily phosphorylated by CDKA;1 (Nowack *et al.*, 2012). Consistently, RBR–E2F target genes that are critical for S-phase entry were downregulated in *cdka* null mutant plants (Nowack *et al.*, 2012).

E2F–DP family members that interact with pRb are conserved in plants as well. *Arabidopsis* has six E2F-like proteins and two DPs; however, only AtE2Fa, AtE2Fb, and AtE2Fc were confirmed to bind DP (reviewed in Ramirez-Parra *et al.*, 2007). While E2Fa and E2Fb are transcriptional activators (de Veylder *et al.*, 2002; Mariconti *et al.*, 2002; Magyar *et al.*, 2005), E2Fc appears to function as a transcriptional repressor (del Pozo *et al.*, 2002). E2Fa and E2Fb dimerize with either DPa or DPb (de Veylder *et al.*, 2002; Magyar *et al.*, 2005; Heckmann *et al.*, 2011) and E2Fc with DPb (del Pozo *et al.*, 2002). Although the upregulation of many S-phase genes with conserved E2F-binding sites in their promoter regions is correlated with RBR phosphorylation and direct binding of E2F–DP and RBR to E2F-binding sites has been demonstrated *in vitro* (Uemukai *et al.*, 2005), *in vivo* binding of the E2F–DP-RBR complex was reported only recently (Magyar *et al.*, 2012). E2Fa and E2Fb directly interact with

RBR *in vivo* and the binding efficiency was increased by the dimerization of the E2Fs and DPa. Increased phosphorylation of RBR induced by *CycD3;1* overexpression disrupted the interaction between E2Fb and RBR; however, interestingly it did not much affect the interaction between E2Fa and RBR (Magyar *et al.*, 2012). Overexpression of a truncated *E2FA* lacking the RBR-binding region and transactivation domain together with DPa increased expression of the E2F target gene *CCS52* (Magyar *et al.*, 2012). Thus, when RBR is dissociated from the E2Fa–DPa complex, the expression of *CCS52* is activated by the E2Fa–DPa complex which lacks the transactivation domain. In this case, the association of RBR with the E2F–DP complex appears to be required to recruit the corepressor to the E2F target loci. While corepressors have not yet been identified in plants *in vivo*, a number of corepressors that are recruited by pRb to E2F target genes have been identified in animals, including HDACs, histone demethylases, DNA methyl transferases, histone methyl transferases (reviewed in Talluri and Dick, 2012), and the SWI–SNF complex (Zhang *et al.*, 2000; Flowers *et al.*, 2010).

As in animals, proteins encoded by plant DNA viruses can bind RBR (Hanley-Bowdin *et al.*, 2004) and their expression in plants increases transcription of key S-phase genes, such as *PROLIFERATING CELLULAR NUCLEAR ANTIGEN 1* (*PCNA1*), *CELL DIVISION CONTROL 6* (*CDC6*), *ARABIDOPSIS HOMOLOGUE OF YEAST CDT1* (*CDT1*), and *ORIGIN RECOGNITION COMPLEX* (*ORC*) (Desvoyes *et al.*, 2006). These S-phase genes have canonical E2F-binding sites in their promoter regions and are E2F–DP target genes (reviewed in Ramirez-Parra *et al.*, 2007). RBR is enriched on *PCNA1* promoter fragments containing an E2F-binding motif (Johnston *et al.*, 2008), suggesting that plant DNA viruses modify RBR to cause its dissociation from the E2F–DP complex in order to activate the genes for DNA-replication proteins to facilitate viral DNA replication. RBR has now been found to bind to promoter regions of several other E2F target S-phase genes, including *F-BOX-LIKE 17* (*FBL17*) (Zhao *et al.*, 2012), *CDC6*, *MINICHROMOSOME MAINTENANCE* (*MCM*)*2*, *MCM5*, *ORC1*, *ORC2*, *ORC3*, and *CDKB1;1* (Nowack *et al.*, 2012). Interestingly, the promoter region of *CDKB1;2* lacks a canonical E2F-binding motif; however, this gene is also upregulated at the G1–S transition and RBR binds to its promoter region (Nowack *et al.*, 2012). It is noteworthy that the promoter region and 5′ untranscribed region of *AtRBR1* also contains conserved E2F-binding motifs (Vandepoele *et al.*, 2005) and plants that overexpress E2Fa–DPa have increased RBR levels (Magyar *et al.*, 2012). This observation is consistent with the increased *RBR* transcription in plants that overexpress *CYCD3;1* (Dewitte *et al.*, 2003), which would be expected to promote RBR phosphorylation and in turn activate E2F–DP target genes. Nevertheless, the increased transcription of *RBR* and accumulation of the protein in plants that overexpress CYCD3;1 and E2Fa–DPa remains to be reconciled with the presumed repressor activity of RBR for E2F target genes.

Together, plant RBR and animal pRb share similar functions during the G1 to S transition, although more detailed information needs to be obtained for plants. However, CycD–CDK phosphorylation of RBR most likely induces similar conformational changes in RBR and stimulates the dissociation of RBR from the E2F–DP complex, resulting in the transactivation of S-phase E2F target genes. Much of the known pRb- or RBR-mediated cell-cycle control involves E2F and DP transcription factors, although inactivation of E2F target gene transcription by RBR may not occur exclusively via direct inhibition of the E2F transactivation domain. In mammalian cells, a wide range of E2F target genes are also regulated by local chromatin modifications, such as histone acetylation and deacetylation (reviewed in Talluri and Dick, 2012). Histone acetylation promotes transcription, while deacetylation generally inhibits transcription as a result of subsequent chromatin condensation (reviewed in Glozak and Seto, 2007). pRb targets HDACs to the promoter region of E2F target genes (reviewed in Zhang and Dean, 2001); however, the underlying molecular mechanism is still unknown. Although pRb and HDACs can be coimmunoprecipitated (Brehm *et al.*, 1998), the interaction between HDAC and pRb might be indirect (Meloni *et al.*, 1999; reviewed in Talluri and Dick, 2012). It is possible that the LXCXE-binding cleft of pRb is involved in binding the HDAC-containing complex. In plants, the *in vivo* interaction between RBR and HDAC could suppress the transcription of a reporter gene (Rossi *et al.*, 2003). However, there is currently no evidence that a RBR–HDAC complex controls the expression of plant cell-cycle genes.

Function of RBR during the G2–M transition

In addition to the G1–S transition, increasing evidence suggests that animal pRb is also required during the progression through G2 and for the transition to M phase (reviewed in Henley and Dick, 2012). For example, pRb-deficient cells overexpress several E2F-targeted G2–M-specific genes, which delays progression through G2 and transition into M phase (Hernando *et al.*, 2004). Downregulation of *Arabidopsis* RBR causes the accumulation of cells in G2 phase (Hirano *et al.*, 2008; Borghi *et al.*, 2010). However, since the cultured cells in which RBR was downregulated clearly continued to cycle (Hirano *et al.*, 2008), it is likely that cell were not arrested at G2 but were only delayed in their G2–M transition. Thus, the function of pRb in G2 progression and M-phase transition might be conserved in plants to some extent as well; however, the molecular mechanisms that may be causing such a delay are currently unknown.

Interaction of RBR and chromatin-modifying factors in the control of plant development

While grass genomes that have been sequenced to date encoded two or three *RBR* genes, *Arabidopsis* has only one copy of *RBR* (Sabelli and Larkins, 2006). The function of plant *RBR* genes was not well understood until the analysis

of *Arabidopsis* mutants revealed that the loss of RBR function is female gametophytically lethal (Ebel *et al.*, 2004). The loss of RBR also affects the development of the male gametophyte (Johnston *et al.*, 2008), indicating that RBR is directly required for cell-fate decisions and correct development of the gametes. Intensive analyses of the underlying molecular network have revealed a RBR–PRC2 regulatory circuit that controls the *Arabidopsis* gametophyte development (Johnston *et al.*, 2008). This section summarizes the function of RBR and its cooperation with the PRC2 complex during gametophyte development in *Arabidopsis*.

RBR in female gametophyte development

Following meiosis, the *Arabidopsis* female gametophyte develops through three mitotic divisions of the megaspore nucleus and subsequent cellularization that produced the egg cell, two synergic cells, the central cell with two nuclei, and the antipodal cells, which subsequently undergo programmed cell death (Fig. 2). The development of *rbr* female gametophyte is morphologically normal until the FG5 stage,

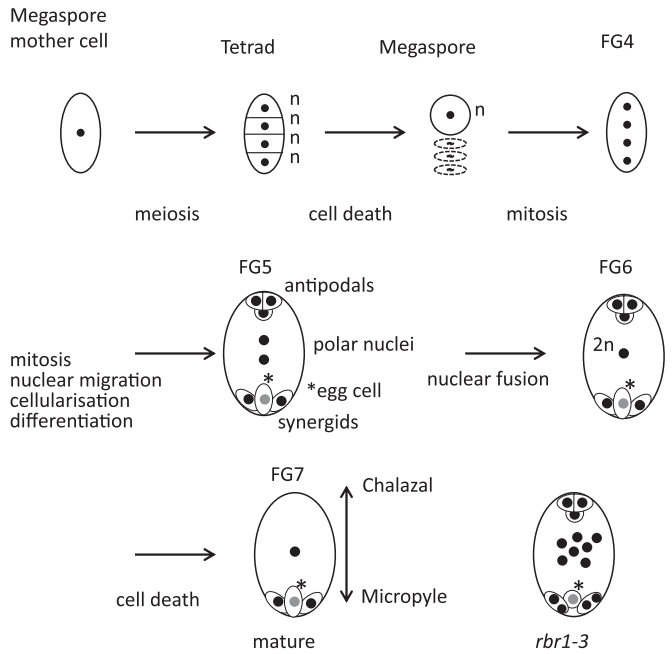

Fig. 2. Female gametophyte development and *rbr* phenotype in *Arabidopsis*. A megaspore mother cell undergoes meiosis and produces four haploid cells (tetrads) of which only one cell survives and becomes the haploid megaspore. The megaspore undergoes three rounds of mitosis, resulting in the formation of a cell with eight nuclei (stage FG5.1). Subsequently, the nuclei are cellularized (i.e. surrounded by cell walls) and migrate to designated position (stage FG5.2). As a result, the female gametophyte consists of three antipodal cells at the chalazal domain, two central cell nuclei in the centre of the embryo sac, an egg cell, and two synergid cells at the micropyle domain. The two central cell nuclei fuse (stage FG6), and as a consequence the embryo sac has seven nuclei and seven cells. After the programmed cell death of the antipodal cells, the embryo sac matures (stage FG7), having four nuclei and four cells (reviewed in Drews and Yadegari, 2002). The *rbr1-3* mutant has supernumerary nuclei and most nuclei fail or misexpress marker genes that are typically activated in the different cell types of the wild-type female gametophyte (see text for more detail).

in which the eight nuclei have migrated to their appropriate position within the embryo sac to establish the charazal–micropyle polarity. After the migration, nuclear mitosis does not become arrested in the *rbr* gametophyte, leading to the accumulation of supernumerary nuclei at the mature stage (Ebel *et al.*, 2004) and partial cellularization (Fig. 2; Johnston *et al.*, 2008). Therefore RBR function is pivotal for cell-cycle arrest at the mature stage of the female gametophyte. In addition, detailed observation of chromosomes showed that the polar nuclei in the central cell were not fused in *rbr* gametophytes (Johnston *et al.*, 2010). Molecular characterization of cell identity in *rbr* gametophytes revealed that cell-type-specific markers were not expressed in more than 90% of *rbr* gametophytes. The remaining population of *rbr* gametophytes showed some marker gene signals; however, these were spatially mis-expressed (Johnston *et al.*, 2010). Together, RBR is required for both cell-cycle control and cell differentiation, although it remains open as to whether RBR is directly involved in cell-type specification or whether the failure of the cell-fate decision is a consequence of the loss of cell-cycle control. The phenotype of *rbr* gametophytes resembles that of the *fertilization independent seed* (*fis*)-class mutants, although RBR loss of function results in more severe defects and earlier abortion of embryo development (Ohad *et al.*, 1996; Chaudhury *et al.*, 1997; Kiyosue *et al.*, 1999; Johnston *et al.*, 2010).

Arabidopsis FIS encodes a subunit of the PcG that mediates chromatin modification and gene silencing. PcG genes were originally identified in *Drosophila*, where they silence homeotic genes during early embryogenesis (reviewed in Schwartz and Pirrotta, 2007). Later, it was found that this group of genes is evolutionary conserved in metazoans and plants, suggesting that the PcG regulatory system must have existed before the divergence of animals and plants (Hennig and Derkacheva, 2009). PcG proteins form multiprotein complexes, including Polycomb Repressive Complex 1 (PRC1) and PRC2. The PRC2 complex attaches three methyl groups to Lys 27 in histone H3 (H3K27me3), which results in the repression of gene activity. PRC1 functions downstream of PRC2 by binding H3K27me3 and is thought to maintain the repression of gene expression via monoubiquitination of Lys119 in histone H2A and condensation of chromatin (reviewed in Margueron and Reinberg, 2011). The *Drosophila* PRC2 complex has four core protein members that are essential for efficient methyltransferase activity on H3K27 *in vitro*, namely Ez (a histone methyltransferase), Suz12 (a zinc finger protein), Esc (a WD40 protein that binds to histone), and p55 (a WD40 protein that is also found in other complexes) (Table 1). In *Arabidopsis*, the FIS PRC2 complex is involved in female gametophyte development (reviewed in Köhler and Makarevich, 2006). As summarized in Table 1, the FIS PRC2 complex contains MEDEA (MEA, an Ez homologue), FERTILIZATION INDEPENDENT SEED 2 (FIS2, a Suz12 homologue), MULTICOPY SUPPRESSOR OF IRA1 (MSI1, a p55 homologue), and FERTILIZATION-INDEPENDENT ENDOSPERM (FIE, an Esc homologue). While *MSI1* and *FIE* are expressed widely in the plant, *MEA* and *FIS2*

Table 1. Arabidopsis *PcG complexes*

Arabidopsis	*Drosophila*	Protein feature
FIS complex		
MEA or SWN	Ez	Methyltransferase
FIS2	Suz12	Zinc finger
MSI1	P55	WD40
FIE	Esc	WD40
EMF complex		
CLF or SWN	Ez	Methyltransferase
EMF2	Suz12	Zinc finger
MSI1	P55	WD40
FIE	Esc	WD40
VRN2 complex		
CLF or SWN	Ez	Methyltransferase
VRN2	Suz12	Zinc finger
MSI1	P55	WD40
FIE	Esc	WD40
PRC1-like		
AtRING1a	dRING	H2Aub1 writer
AtRING1b	dRING	H2Aub1 writer
AtBMI1a	Psc	WD40
AtBMI1b	Psc	WD40
LHP1	Pc	H3K27me3 reader
–	Ph	?
EMF1	–	DNA-binding
VRN1	–	DNA-binding

are imprinted and expressed only in the central cell and endosperm of the embryo sac (Luo *et al.*, 2000).

FIS2 expression is reduced in *rbr* embryo sacs; however, interestingly, the expression of imprinted *MEA* is not affected by the loss of RBR function (Johnston *et al.*, 2008). In addition, the expression of PRC2 subunits that is usually restricted to the sporophyte, SWINGER (SWN) and CURLY LEAF (CLF), was upregulated in *rbr* ovules. These data suggest that RBR is required for regulating the expression of PRC2 genes, both by repressing the expression of nonimprinted PRC2 genes and promoting the expression of the imprinted FIS2 gene during seed development.

The autonomous endosperm development in the *rbr* embryo sac is most likely the result of reduced *FIS2* expression in *rbr* central cells. The maintenance of *FIS2* imprinting depends on METHYLTRANSFERASE 1 (MET1)-mediated DNA methylation in the promoter region of *FIS2*. The activation of *FIS2* expression in the central cell and endosperm requires demethylation of the promoter region, which is facilitated by DEMETER (Jullien *et al.*, 2006). Interestingly, *MET1* expression is upregulated in *rbr* female gametophytes. In wild-type male gametophytes, RBR is enriched in the *MET1* promoter region, in particular at the canonical E2F-binding site (Johnston *et al.*, 2008), suggesting that *MET1* is a target of RBR regulation. While the mechanism of RBR interaction with the *MET1* promoter remains to be established, it has been reported that both MSI1 and RBR bind to the same region in the *MET1* promoter (Jullien *et al.*, 2008). While the interaction of *Arabidopsis* RBR and MSI via the RbA domain appears to be direct (Jullien *et al.*, 2008), the interaction between human pRb and RbAp48, the human homologue of MSI1, is indirect (Brehm *et al.*, 1998). Instead, RbAp48 binds to HDAC1, which also binds pRb via the LXCXE domain (Meloni *et al.*, 1999). While these details still need to be worked out in *Arabidopsis*, the current data nevertheless indicate that, in *rbr* plants, *MET1* expression fails to be repressed by the RBR–MSI1 complex, which results in the suppression of *FIS2* expression and overproliferation of central cell nuclei (Fig. 3).

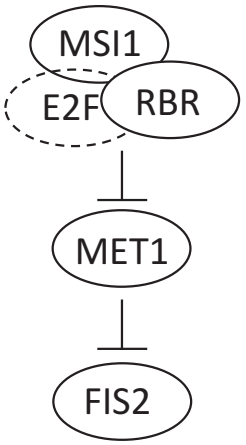

Fig. 3. The MSI1–RBR complex (most probably containing E2F) binds to the MET1 promoter region and suppresses MET1 expression. MET1 methylates CG in the FIS2 promoter region, resulting in the suppression of FIS2 expression prior to fertilization. Loss of RBR function causes overexpression of MET1, which can explain the repression of *FIS2* in the central cell of female gametophytes in *rbr* mutants.

While central cell nuclei in wild type do not exhibit heterochromatin regions, ectopic heterochromatin regions were observed in central cell nuclei in *rbr* and mutants of PRC2 genes (Baroux *et al.*, 2007; Johnston *et al.*, 2008). As MET1 is known to be required for heterochromatin maintenance in the sporophyte, the ectopic heterochromatin in the central cell region in *rbr* and *PRC2* mutants might be a consequence of upregulated *MET1* expression.

Although the target genes that are regulated by the FIS PRC2 complex during endosperm development have not been identified, the promoter region of *RBR* is modified by H3K27me3 in pollen, consistent with reduced *RBR* expression in wild-type pollen but increased RBR expression in the PRC2 mutant *msi1* (Johnston *et al.*, 2008). Moreover, the paternal *RBR* allele remains repressed in the wild type during early seed development, but it is derepressed in PRC2 mutants such as *mea-1* or *msi1-1* (Johnston *et al.*, 2008). Together, RBR cooperates with the PRC2 complex to establish H3K27me3 during female gametophyte development, most likely via suppression of *MET1*, and the paternal *RBR* is repressed by the PRC2 complex. These data suggest a model in which RBR and PRC2 form a dynamic and reciprocally repressive regulatory circuit.

The regulation of PRC2 gene expression seems to require a higher dosage of RBR than appears to be required for control of the cell cycle. Heterozygous *rbr* plants (*rbr*/*RBR*) produce 6% triploid progeny and these triploid plants produce tetraploid offspring (Johnston *et al.*, 2010). While triple-mutant plants with three RBR loss-of-function alleles (*rbr*/*rbr*/*rbr*/

RBR) do not have obvious defects in cell proliferation and DNA endoreduplication, they show pleiotropic defects in shoot development and compromised regulation in the expression of genes encoding PRC2-subunit proteins (Johnston *et al.*, 2010). Although diploid *rbr* heterozygous plant (*rbr*/*RBR*) have normal expression levels of *MET1* and PRC2-subunit genes, expression of *MET1* and the PRC2-subunit gene *CLF*, in leaves of *rbr*/*rbr*/*rbr*/*RBR* triplex mutants, interestingly, expression of the gene for the PRC2 subunit REDUCED VERNALIZATION RESPONSE 2 (*VRN2*) was reduced at the same time. Thus, further work is needed to fully understand the regulatory network in which RBR and PRC2 cooperate during gametophytic and sporophytic development.

RBR at the transition from heterotrophic to autotrophic growth

RBR cosuppression (*RBRcs*) plants or CaMV 35S promoter:RBR-RNAi mutants develop embryos with supernumerary cells but nearly normal morphology and arrest during seedling establishment (Gutzat *et al.*, 2011). Thus RBR is required to restrict cell division during embryo development and to promote seedling establishment and the transition to autotrophic growth. Sucrose supplementation to *RBRcs* seedlings at levels that do not affect wild-type seedlings (1%) can release the seedling arrest and stimulate cell division; however, the seedlings show abnormal morphogenesis including the formation of callus-like structures and ectopic accumulation of lipids. Such accumulation of lipids is typical for the embryo during the late stage of seed maturation, and, consistent with this, transcription profiling of sucrose supplemented *RBRcs* plants revealed a clear shift towards embryonic identity (Gutzat *et al.*, 2011). Such sucrose-induced upregulation of embryonic genes might be partially attributed to sucrose-mediated ABA accumulation (Rolland *et al.*, 2006). Interestingly, RBR antibody chromatin immunoprecipitation using wild-type seedlings uncovered that the promoter regions of several late embryonic genes, such as *ARABIDOPSIS RAB GTPASE HOMOLOGUE B18* (*RAB18*), *ABA INSENSITIVE 3* (*ABI3*), *SUCROSE TRANSPORTER 4* (*SUT4*), *CRUCIFERIN 3* (*CRU3*), and *GUANINE NUCLEOTIDE EXCHANGE FACTOR FOR ADP RIBOSYLATION FACTORS 1* (*GEA1*) were occupied by RBR and modified with H3K27me3. The PRC2 modification was also detected in the promoter of *LEAFY COTYLEDON 2* (*LEC2*); however, RBR was not enriched in this region. The high levels of H3K27me3 observed in late embryonic genes in wild-type seedlings were strongly decreased in *RBRcs* seedlings, except the promoter region of *LEC2* (Gutzat *et al.*, 2011). Together, the data are consistent with a model in which RBR cooperates with PRC2 to permanently inactivate the late embryonic genes via the establishment or maintenance of H3K27me3 during sporophytic development. However, the detailed mechanism and potentially other involved chromatin modifiers have not yet been identified.

A series of reports have suggested that gene silencing mediated by PcG complex(es) is pivotal for seedling establishment when sucrose is added during germination. For example, lipid accumulation and development of callus-like structures were also found for the PRC2 mutants *fie* (Bouyer *et al.*, 2011) and *clf swn* (Chanvivattana *et al.*, 2004; Aichinger *et al.*, 2009), as well as the PRC1-like mutants *Atbmi1a Atbmi1b* (Bratzel *et al.*, 2010) and *Atring1a Atring1b* (Chen *et al.*, 2010). In many cases, the expression of genes for proteins that regulate embryonic genes, such as *ABI3*, *AGAMOUS-LIKE 15* (*AGL15*), *FUSCA 3* (*FUS3*), and *LEC2* were upregulated in the PRC2- and PRC1-like mutants (Makarevich *et al.*, 2006; Bratzel *et al.*, 2010; Bouyer *et al.*, 2011), although the repressive H3K27me3 mark persisted on the *FUS3* locus (Bratzel *et al.*, 2010). These observations suggest that not only the PRC2-mediated H3K27me3 deposition but also additional silencing mechanisms, perhaps mediated by a PRC1-like complex, might be necessary for the permanent inactivation of embryonic genes in the sporophyte.

The detailed molecular mechanisms of PRC2-dependent H3K27 trimethylation during seedling establishment are not yet known; however, involvement of other chromatin modifications in this process has been suggested. Loss of function of HDAC19 causes embryonic lethality and the ectopic expression of late embryonic genes (Zhou *et al.*, 2013). Such ectopic expression of embryonic genes was associated with the increased levels of activation marks, such as histone H3 acetylation (H3ac), histone H4 acetylation (H4ac), and histone H3 Lys4 trimethylation (H3K4me3), while the repression H3K27me3 mark in the promoter region of late embryonic genes was decreased (Zhou *et al.*, 2013). HSI2-like 1 (HSL1) was shown to interact with HDAC19 and repress the expression of the late embryonic genes by binding to their promoter regions (Zhou *et al.*, 2013). HIGH-LEVEL EXPRESSION OF SUGAR-INDUCIBLE GENE 2 (HSI2) and HSL1 work redundantly during seedling establishment and both contain a B3 DNA-binding domain and repress the transcription of sugar-inducible reporter genes (Tsukagoshi *et al.*, 2007). The seedlings of *hsi2 hsl1* double mutant are seedling lethal, and late embryonic genes are upregulated when sucrose is supplied (Tsukagoshi *et al.*, 2007). Thus, HADC activity seems to be involved in the control of H3K27me3 levels during seedling development. Although *HSI2* and *HSL1* are expressed normally in *RBRcs* seedlings in the presence of sucrose (Gutzat *et al.*, 2011), the involvement of HDAC19 (or other HDAC proteins) in the cooperative RBR- and PRC2-mediated deposition of H3K27me3 needs to be examined.

Another line of evidence indicates that the ATP-dependent chromatin-remodelling factor PICKLE (PKL) promotes the deposition of H3K27me3 on embryonic genes during seedling establishment (Ho *et al.*, 2013). PKL is involved in the switch from heterotrophic to autotrophic growth at the root tip; within 48 hours after germination, the expression of embryonic genes is turned off in a PKL- and GA-dependent manner (Ogas *et al.*, 1997; Li *et al.*, 2005). The expression of *LEAFY COTYLEDON 1* (*LEC1*) and *LEC2* is upregulated in germinating *pkl* mutant seeds, while strong upregulation of *FUS3*, *LEC2*, and *LEC1* are observed in *pkl* mutant roots (Rider *et al.*, 2003). Although the molecular mechanism has not yet been clarified, PKL promotes the deposition of

H3K27me3 on *LEC1* and *LEC2* loci during germination (Zhang *et al.*, 2008, 2012). However, the expression levels of PRC2 genes are normal in germinating *pkl* seeds (Zhang *et al.*, 2012), and thus PKL seems to be responsible for either the recruitment or the maintenance of H3K27me3 to target loci later in seedling establishment. Since *ABI3* and *LEC2* expression is increased in *RBRcs* seedlings in the absence of sucrose (Gutzat *et al.*, 2011), RBR appears to be required during the initial suppression of late embryonic genes.

The cooperation of pRb with PcG complexes also has been found in mammalian cell lines. Dahiya *et al.*, (2001) reported that a pRb–E2F complex associates with a subunit of the PRC1 complex in human cultured cell lines in suppressing M-phase gene expression and causes G2 arrest. The expression of mouse PRC2 subunits EZH2 (Ez class) and EED (Esc class) is also controlled by pRb–E2F complex (Bracken *et al.*, 2003). pRb is required for establishing H3K27me3 on the gene for CDK inhibitor 2A in human and mouse primary cell lines (Kotake *et al.*, 2007), which ensures cell proliferation and stem-cell renewal. In this case, pRb is necessary to facilitate the binding of both PRC2 and target genes. Likewise, H3K27me3 modification of many G1–S cell-cycle genes is pRb dependent and essential for maintaining cell-cycle arrest in differentiated tissues (Blais *et al.*, 2007).

Together, the cooperation of animal pRb and *Arabidopsis* RBR with PcG complexes clearly requires further investigations because it appears to highly context dependent and the underlying mechanisms could involve other complexes. Considering that plants also have PRC1-like complex activities and PRC1-like complex(es) may function cooperatively or downstream of PRC2 complexes (Bratzel *et al.*, 2010; Li *et al.*, 2011; Derkacheva *et al.*, 2013; reviewed in Molitor and Shen, 2013), the possibility that in *Arabidopsis* RBR might associate with both PRC2 and PRC1-like complex needs to be investigated.

Future perspectives

Animal pRb and plant RBR cooperate with a variety of chromatin modifiers to control various developmental/physiological events. In *Arabidopsis*, RBR is required for the suppression of embryonic genes during seedling establishment and most remarkably for one of the most important decision processes in the life of the plant, the transition from heterotrophic to autotrophic metabolism during postembryonic development. Thus, seedling establishment provides an ideal and tractable experimental system to dissect and better understand the cooperation of RBR with chromatin-modifying complexes in facilitating developmental decisions, both in tissues and whole plants in a context-dependent manner. This may uncover novel proteins or already known chromatin-modifying complexes that utilize RBR as a docking platform for the dynamic coordination of chromatin modifications that need to re-established during cell division and maintained in cells that have exited the cell cycle. At present, only a small number of cooperative interactions of pRb in animals and RBR in plants have been uncovered. Clearly, much more work lies ahead to fully understand the Retinoblastoma regulatory network.

Acknowledgements

This work was supported by the Swiss National Science Foundation (W.G.). The authors thank Dr Johannes Fütterer for critical reading of the manuscript.

References

Abrahám E, Miskolczi P, Ayaydin F, Yu P, Kotogány E, Bakó L, Otvös K, Horváth GV, Dudits D. 2011. Immunodetection of retinoblastoma-related protein and its phosphorylated form in interphase and mitotic alfalfa cells. *Journal of Experimental Botany* **62,** 2155–2168.

Ach RA, Durfee T, Miller AB, Taranto P, Hanley-Bowdoin L, Zambryski PC, Gruissem W. 1997. RRB1 and RRB2 encode maize retinoblastoma-related proteins that interact with a plant D-type cyclin and geminivirus replication protein. *Molecular Cell Biology* **17,** 5077–5086.

Aichinger E, Villar CBR, Farrona S, Reyes JC, Hennig L, Koehler C. 2009. CHD3 proteins and polycomb group proteins antagonistically determine cell identity in *Arabidopsis*. *PLoS Genetics* **5,** e1000605.

Baroux C, Pecinka A, Fuchs J, Schubert I, Grossniklaus U. 2007. The triploid endosperm genome of *Arabidopsis* adopts a peculiar, parental-dosage-dependent chromatin organization. *The Plant Cell* **19,** 1782–1794.

Blais A, van Oevelen CJC, Margueron R, Acosta-Alvear D, Dynlacht BD. 2007. Retinoblastoma tumor suppressor protein-dependent methylation of histone H3 lysine 27 is associated with irreversible cell cycle exit. *Journal of Cell Biology* **179,** 1399–1412.

Borghi L, Gutzat R, Fütterer J, Laizet Y, Hennig L, Gruissem W. 2010. *Arabidopsis* RETINOBLASTOMA-RELATED is required for stem cell maintenance, cell differentiation, and lateral organ production. *The Plant Cell* **22,** 1792–1811.

Bouyer D, Roudier F, Heese M, *et al*. 2011. Polycomb repressive complex 2 controls the embryo-to-seedling phase transition. *PLoS Genetics* **7,** e1002014.

Bracken AP, Pasini D, Capra M, Prosperini E, Colli E, Helin K. 2003. EZH2 is downstream of the pRB-E2F pathway, essential for proliferation and amplified in cancer. *EMBO Journal* **22,** 5323–5335.

Bratzel F, Lopez-Torrejon G, Koch M, Del Pozo JC, Calonje M. 2010. Keeping cell identity in *Arabidopsis* requires PRC1 RING-Finger homologs that catalyze H2A monoubiquitination. *Current Biology* **20,** 1853–1859.

Brehm A, Kouzarides T. 1999. Retinoblastoma protein meets chromatin. *Trends in Biochemical Sciences* **24,** 142–145.

Brehm A, Miska EA, McCance DJ, Reid JL, Bannister AJ, Kouzarides T. 1998. Retinoblastoma protein recruits histone deacetylase to repress transcription. *Nature* **391,** 597–601.

Burke JR, Hura GL, Rubin SM. 2012. Structures of inactive retinoblastoma protein reveal multiple mechanisms for cell cycle control. *Genes and Development* **26,** 1156–1166.

Chanvivattana Y, Bishopp A, Schubert D, Stock C, Moon YH, Sung ZR, Goodrich J. 2004. Interaction of Polycomb-group proteins controlling flowering in *Arabidopsis*. *Development* **131,** 5263–5276.

Chaudhury AM, Ming L, Miller C, Craig S, Dennis ES, Peacock WJ. 1997. Fertilization-independent seed development in *Arabidopsis thaliana*. *Proceedings of the National Academy of Sciences, USA* **94,** 4223–4228.

Chen D, Molitor A, Liu C, Shen WH. 2010. The *Arabidopsis* PRC1-like ring-finger proteins are necessary for repression of embryonic traits during vegetative growth. *Cell Research* **20,** 1332–1344.

Dahiya A, Wong S, Gonzalo S, Gavin M, Dean DC. 2001. Linking the Rb and Polycomb Pathways. *Molecular Cell* **8,** 557–568.

del Pozo JC, Boniotti MB, Gutierrez C. 2002. *Arabidopsis* E2Fc functions in cell division and is degraded by the ubiquitin-SCF(AtSKP2) pathway in response to light. *The Plant Cell* **14,** 3057–3071.

de Veylder L, Beeckman T, Beemster GT, *et al*. 2002. Control of proliferation, endoreduplication and differentiation by the *Arabidopsis* E2Fa-DPa transcription factor. *EMBO Journal* **15,** 1360–1368.

Derkacheva M, Möller-Steinbach Y, Wildhaber T, Mozgova I, Mahrez W, Nanni P, Bischof S, Gruissem W, Hennig L. 2013. *Arabidopsis* MSI1 connects LHP1 to PRC2 complexes. *EMBO Journal* **32,** 2073–2085.

Desvoyes B, Ramirez-Parra E, Xie Q, Chua NH, Gutierrez C. 2006. Cell type-specific role of the retinoblastoma/E2F pathway during *Arabidopsis* leaf development. *Plant Physiology* **140,** 67–80.

Dewitte W, Riou-Khamlichi C, Scofield S, Healy JM, Jacqmard A, Kilby NJ, Murray JA. 2003. Altered cell cycle distribution, hyperplasia, and inhibited differentiation in *Arabidopsis* caused by the D-type cyclin CYCD3. *The Plant Cell* **15,** 79–92.

Dick FA, Dyson N. 2003. pRB contains an E2F1 specific binding domain that allows E2F1 induced apoptosis to be regulated separately from other E2F activities. *Molecular Cell* **12,** 639–649.

Dick FA, Rubin SM. 2013. Molecular mechanisms underlying RB protein function. *Nature Reviews Molecular Cell Biology* **14,** 297–306.

Dowdy SF, Hinds PW, Louie K, Reed SI, Arnold A, Weinberg RA. 1993. Physical interaction of the retinoblastoma protein with human cyclins. *Cell* **73,** 499–511.

Drews GN, Yadegari R. 2002. Development and function of the angiosperm female gametophyte. *Annual Review of Genetics* **36,** 99–124.

Durfee T, Feiler HS, Gruissem W. 2000. Retinoblastoma-related proteins in plants: homologues or orthologues of their metazoan counterparts? *Plant Molecular Biology* **43,** 635–642.

Ebel C, Mariconti L, Gruissem W. 2004. Plant retinoblastoma homologues control nuclear proliferation in the female gametophyte. *Nature* **429,** 776–780.

Flowers S, Beck GR Jr, Moran E. 2010. Transcriptional activation by pRB and its coordination with SWI/SNF recruitment. *Cancer Research* **70,** 8282–8287.

Glozak MA, Seto E. 2007. Histone deacetylases and cancer. *Oncogene* **26,** 5420–5432.

Gruissem W. 2007. Function of the retinoblastoma-related protein in plants. In: Inze D, ed, *Cell cycle control and plant development*. Oxford: Blackwell Scientific, pp 164–186.

Gutierrez C. 2009. The *Arabidopsis* cell division cycle. In: *The Arabidopsis Book* **7,** e0120.

Gutzat R, Borghi L, Fütterer J, Bischof S, Laizet Y, Hennig L, Feil R, Lunn J, Gruissem W. 2011. RETINOBLASTOMA-RELATED PROTEIN controls the transition to autotrophic plant development. *Development* **138,** 2977–2986.

Gutzat R, Borghi L, Gruissem W. 2012. Emerging roles of RETINOBLASTOMA-RELATED proteins in evolution and plant development. *Trends in Plant Science* **17,** 139–148.

Hanley-Bowdoin L, Settlage SB, Robertson D. 2004. Reprogramming plant gene expression: a prerequisite to geminivirus DNA replication. *Molecular Plant Pathology* **5,** 149–156.

Heckmann S, Lermontova I, Berckmans B, De Veylder L, Bäumlein H, Schubert I. 2011. The E2F transcription factor family regulates *CENH3* expression in *Arabidopsis thaliana*. *The Plant Journal* **68,** 656–656.

Henley SA, Dick FA. 2012. The retinoblastoma family of proteins and their regulatory functions in the mammalian cell division cycle. *Cell Division* **7,** 10.

Hennig L, Derkacheva M. 2009. Diversity of Polycomb group complexes in plants: same rules, different players? *Trends in Genetics* **25,** 414–423.

Hernando E, Nahle Z, Juan G, *et al*. 2004. Rb inactivation promotes genomic instability by uncoupling cell cycle progression from mitotic control. *Nature* **430,** 797–802.

Hirano H, Harashima H, Shinmyo A, Sekine M. 2008. *Arabidopsis* RETINOBLASTOMA-RELATED PROTEIN 1 is involved in G1 phase cell cycle arrest caused by sucrose starvation. *Plant Molecular Biology* **66,** 259–275.

Ho KK, Zhang H, Golden BL, Ogas J. 2013. PICKLE is a CHD subfamily II ATP-dependent chromatin remodeling factor. *Biochimica et Biophysica Acta* **1829,** 199–210.

Huntley R, Healy S, Freeman D, *et al*. 1998. The maize retinoblastoma protein homologue ZmRb-1 is regulated during leaf development and displays conserved interactions with G1/S regulators and plant cyclin D (CycD) proteins. *Plant Molecular Biology* **37,** 155–169.

Johnston AJ, Kirioukhova O, Barrell PJ, Rutten T, Moore JM, Baskar R, Grossniklaus U, Gruissem W. 2010. Dosage-sensitive function of retinoblastoma related and convergent epigenetic control are required during the *Arabidopsis* life cycle. *PLoS Genetics* **6,** e1000988.

Johnston AJ, Matveeva E, Kirioukhova O, Grossniklaus U, Gruissem W. 2008. A dynamic reciprocal RBR-PRC2 regulatory circuit controls *Arabidopsis* gametophyte development. *Current Biology* **18,** 1680–1686.

Julian LM, Palander O, Seifried LA, Foster JE, Dick FA. 2008. Characterization of an E2F1 specific binding domain in pRB and its implications for apoptotic regulation. *Oncogene* **27,** 1572–1579.

Jullien PE, Kinoshita T, Ohad N, Berger F. 2006. Maintenance of DNA methylation during the *Arabidopsis* life cycle is essential for parental imprinting. *The Plant Cell* **18,** 1360–1372.

Jullien PE, Mosquna A, Ingouff M, Sakata T, Ohad N, Berger F. 2008. Retinoblastoma and its binding partner MSI1 control imprinting in *Arabidopsis*. *PLoS Biology* **6,** e194.

Kato J, Matsushime H, Hiebert SW, Ewen ME, Sherr CJ. 1993. Direct binding of cyclin D to the retinoblastoma gene product (pRb) and pRb phosphorylation by the cyclin D-dependent kinase, CDK4. *Genes and Development* **7,** 331–342.

Kim HY, Ahn BY, Cho Y. 2001. Structural basis for the inactivation of retinoblastoma tumor suppressor by SV40 large T antigen. *EMBO Journal* **20,** 295–304.

Kiyosue T, Ohad N, Yadegari R, *et al*. 1999. Control of fertilization-independent endosperm development by the *MEDEA* Polycomb gene in *Arabidopsis*. *Proceedings of the National Academy of Sciences, USA* **96,** 4186–4191.

Knudsen ES, Knudsen KE. 2006. Retinoblastoma tumor suppressor: where cancer meets the cell cycle. *Experimental Biology and Medicine* **231,** 1271–1281.

Kotake Y, Cao R, Viatour P, Sage J, Zhang Y, Xiong Y. 2007. pRB family proteins are required for H3K27 trimethylation and Polycomb repression complexes binding to and silencing $p16^{INK4a}$ tumor suppressor gene. *Genes and Development* **21,** 49–54.

Köhler C, Makarevich G. 2006. Epigenetic mechanisms governing seed development in plants. *EMBO Reports* **7,** 1223–1227.

Lee JO, Russo AA, Pavletich NP. 1998. Structure of the retinoblastoma tumour-suppressor pocket domain bound to a peptide from HPV E7. *Nature* **391,** 859–865.

Li HC, Chuang K, Henderson JT, Rider SD Jr, Bai Y, Zhang H, Fountain M, Gerber J, Ogas J. 2005. PICKLE acts during germination to repress expression of embryonic traits. *The Plant Journal* **44,** 1010–1022.

Li W, Wang Z, Li J, Yang H, Cui S, Wang X, Ma L. 2011. Overexpression of *AtBMI1C*, a polycomb group protein gene, accelerates flowering in *Arabidopsis*. *PLoS ONE* **6,** e21364.

Luo M, Bilodeau P, Dennis ES, Peacock WJ, Chaudhury A. 2000. Expression and parent-of-origin effects for *FIS2, MEA*, and *FIE* in the endosperm and embryo of developing *Arabidopsis* seeds. *Proceedings of the National Academy of Sciences, USA* **97,** 10637–10642.

Magyar Z, De Veylder L, Atanassova A, Bakó L, Inzé D, Bögre L. 2005. The role of the *Arabidopsis* E2FB transcription factor in regulating auxin-dependent cell division. *The Plant Cell* **17,** 2527–2541.

Magyar Z, Horvath B, Khan S, Mohammed B, Henriques R, De Veylder L, Bako L, Scheres B, Boegre L. 2012. *Arabidopsis* E2FA stimulates proliferation and endocycle separately through RBR-bound and RBR-free complexes. *EMBO Journal* **31,** 1480–1493.

Makarevich G, Leroy O, Akinci U, Schubert D, Clarenz O, Goodrich J, Grossniklaus U, Koehler C. 2006. Different Polycomb group complexes regulate common target genes in *Arabidopsis*. *EMBO Reports* **7,** 947–952.

Margueron R, Reinberg D. 2011. The Polycomb complex PRC2 and its mark in life. *Nature* **469,** 343–349.

Mariconti L, Pellegrini B, Cantoni R, Stevens R, Bergounioux C, Cella R, Albani D. 2002. The E2F family of transcription factors from *Arabidopsis thaliana*. Novel and conserved components of the

retinoblastoma/E2F pathway in plants. *Journal of Biological Chemistry* **277,** 9911–9919.

Meloni AR, Smith EJ, Nevins JR. 1999. A mechanism for Rb/p130-mediated transcription repression involving recruitment of the CtBP corepressor. *Proceedings of the National Academy of Sciences, USA* **96,** 9574–9579.

Molitor A, Shen W. 2013. The polycomb complex PRC1, composition and function in plants. *Journal of Genetics and Genomics* **40,** 231–238.

Nakagami H, Kawamura K, Sugisaka K, Sekine M, Shinmyo A. 2002. Phosphorylation of retinoblastoma-related protein by the cyclin D/cyclin-dependent kinase complex is activated at the G1/S-phase transition in tobacco. *The Plant Cell* **14,** 1847–1857.

Nakagami H, Sekine M, Murakami H, Shinmyo A. 1999. Tobacco retinoblastoma-related protein phosphorylated by a distinct cyclin-dependent kinase complex with Cdc2/cyclin D in vitro. *The Plant Journal* **18,** 243–252.

Nowack MK, Harashima H, Dissmeyer N, Zhao X, Bouyer D, Weimer AK, De Winter F, Yang F, Schnittger A. 2012. Genetic framework of cyclin-dependent kinase function in *Arabidopsis*. *Developmental Cell* **22,** 1030–1040.

Ogas J, Cheng JC, Sung ZR, Somerville C. 1997. Cellular differentiation regulated by gibberellin in the *Arabidopsis thaliana* pickle mutant. *Science* **277,** 91–94.

Ohad N, Margossian L, Hsu Y-C, Williams C, Repetti P, Fischer RL. 1996. A mutation that allows endosperm development without fertilization. *Proceedings of the National Academy of Sciences, USA* **93,** 5319–5324.

Ramirez-Parra E, del Pozo JC, Desvoyes B, Sanchez MP, Gutierrez C. 2007. E2F-DP transcription factors. In: Inze D, ed, *Cell cycle control and plant development*. Oxford: Blackwell Publishing, pp 138–162.

Reiland S, Messerli G, Baerenfaller K, Gerrits B, Endler A, Grossmann J, Gruissem W, Baginsky S. 2009. Large-scale *Arabidopsis* phosphoproteome profiling reveals novel chloroplast kinase substrates and phosphorylation networks. *Plant Physiology* **150,** 889–903.

Rider SD, Henderson JT, Jerome RE, Edenberg HJ, Romero-Severson J, Ogas J. 2003. Coordinate repression of regulators of embryonic identity by PICKLE during germination in *Arabidopsis*. *The Plant Journal* **35,** 33–43.

Rolland F, Baena-Gonzalez E, Sheen J. 2006. Sugar sensing and signaling in plants: conserved and novel mechanisms. *Annual Review of Plant Biology* **57,** 675–709.

Rossi V, Locatelli S, Lanzanova C, *et al*. 2003. A maize histone deacetylase and retinoblastoma-related protein physically interact and cooperate in repressing gene transcription. *Plant Molecular Biology* **51,** 401–413.

Rubin SM. 2013. Deciphering the retinoblastoma protein phosphorylation code. *Trends in Biochemical Sciences* **38,** 12–19.

Rubin SM, Gall AL, Zheng N, Pavletich NP. 2005. Structure of the Rb C-terminal domain bound to E2F1-DP1, a mechanism for phosphorylation induced E2F release. *Cell* **123,** 1093–1106.

Sabelli PA, Larkins BA. 2006. Grasses like mammals? Redundancy and compensatory regulation within the retinoblastoma protein family. *Cell Cycle* **5,** 352–355.

Schwartz YB, Pirrotta V. 2007. Polycomb silencing mechanisms and the management of genomic programmes. *Nature Reviews Genetics* **8,** 9–22.

Sozzani R, Maggio C, Varotto S, Canova S, Bergounioux C, Albani D, Cella R. 2006. Interplay between *Arabidopsis* activating factors E2Fb and E2Fa in cell cycle progression and development. *Plant Physiology* **140,** 1355–1366.

Talluri S, Dick FA. 2012. Regulation of transcription and chromatin structure by pRB: here, there and everywhere. *Cell Cycle* **11,** 3189–3198.

Tsukagoshi H, Morikami A. Nakamura K. 2007. Two B3 domain transcriptional repressors prevent sugar-inducible expression of seed maturation genes in *Arabidopsis* seedlings. *Proceedings of the National Academy of Sciences, USA* **104,** 2543–2547.

Uemukai K, Iwakawa H, Kosugi S, de Jager S, Kato K, Kondorosi E, Murray JAH, Ito M, Shinmyo A, Sekine M. 2005. Transcriptional activation of tobacco E2F is repressed by co-transfection with the retinoblastoma-related protein: cyclin D expression overcomes this repressor activity. *Plant Molecular Biology* **57,** 83–100.

van den Heuvel S, Dyson NJ. 2008. Conserved functions of the pRB and E2F families. *Nature Reviews Molecular Cell Biology* **9,** 713–724.

Vandepoele K, Vlieghe K, Florquin K, Hennig L, Beemster GT, Gruissem W, Van de Peer Y, Inzé D, De Veylder L. 2005. Genome-wide identification of potential plant E2F target genes. *Plant Physiology* **139,** 316–328.

Weinberg RA. 1995. The retinoblastoma protein and cell cycle control. *Cell* **81,** 323–330.

Zhang H, Bishop B, Ringenberg W, Muir WM, Ogas J. 2012. The CHD3 remodeler PICKLE associates with genes enriched for trimethylation of histone H3 lysine 27. *Plant Physiology* **159,** 418–432.

Zhang H, Rider SD Jr, Henderson JT, *et al*. 2008. The CHD3 remodeler PICKLE promotes trimethylation of histone H3 lysine 27. *Journal of Biological Chemistry* **283,** 22637–22648.

Zhang HS, Dean DC. 2001. Rb-mediated chromatin structure regulation and transcriptional repression. *Oncogene* **20,** 3134–3138.

Zhang HS, Gavin M, Dahiya A, Postigo AA, Ma D, Luo RX, Harbour JW and Dean DC. 2000. Exit from G1 and S phase of the cell cycle is regulated by repressor complexes containing HDAC-Rb-hSWI/SNF and Rb-hSWI/SNF. *Cell* **101,** 79–89.

Zhao X, Harashima H, Dissmeyer N, *et al*. 2012. A general G1/S-phase cell-cycle control module in the flowering plant *Arabidopsis thaliana*. *PLoS Genetics* **8,** e1002847.

Zhou Y, Tan B, Luo M, *et al*. 2013. HISTONE DEACETYLASE19 interacts with HSL1 and participates in the repression of seed maturation genes in *Arabidopsis* seedlings. *The Plant Cell* **25,** 134–148.